REV	REVISION RECORD	DATE	DRWN	CHKD	APVD
A	RELEASED	21.JUN'19	DR	KH	CY
B	REVISED (RD-2020-029)	09.MAR'20	DR	KH	CY
C	REVISED (RD-2020-140)	23.OCT'20	DR	KH	CY

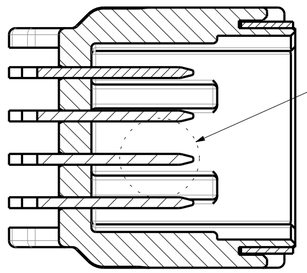

SECTION A-A

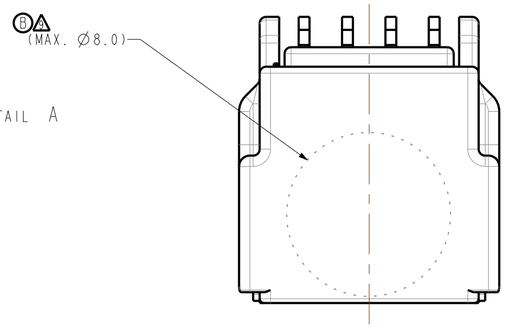

PCB PATTERN

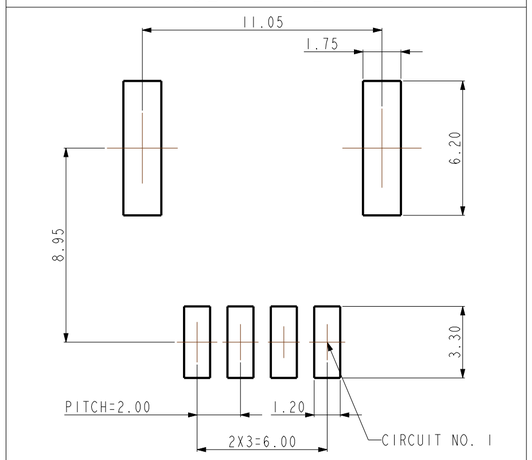

1. TOLERANCE : ±0.05

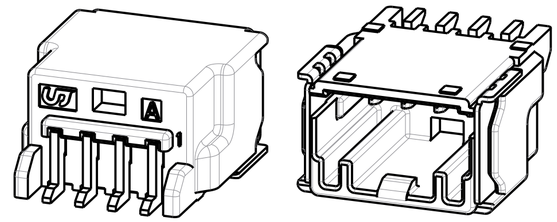

ISO VIEW

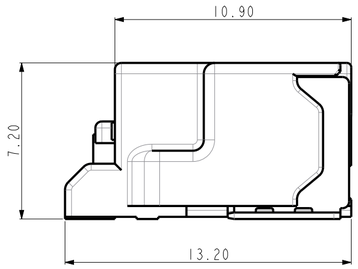

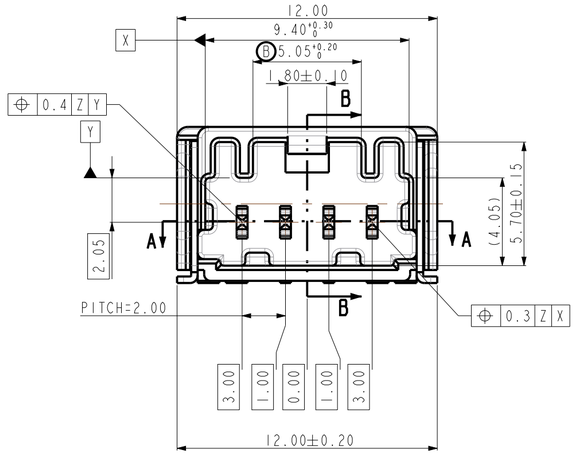

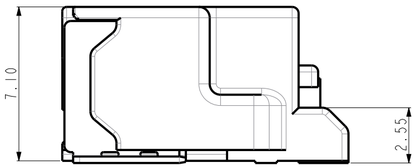

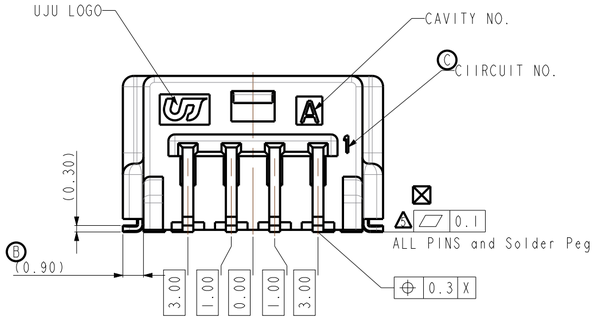

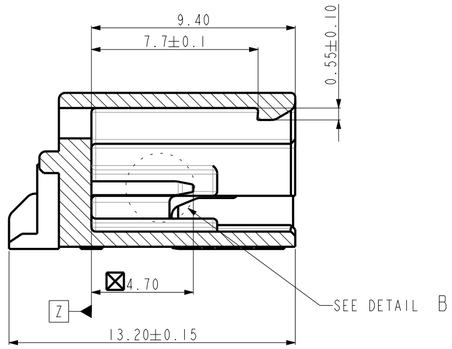

SECTION B-B

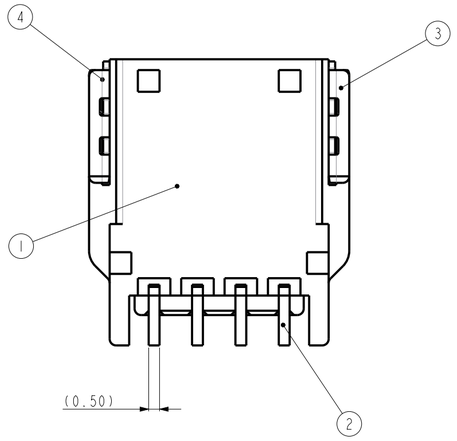

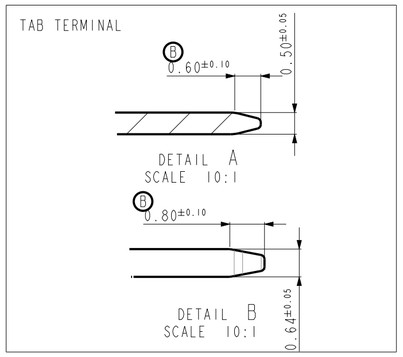

NOTE.

1. GENERAL TOLERANCE : REFER TO DIN 16742 TG5 SPECIFICATION.
B 2. BURR 0.3 MAX.
3. NO CRACK
4. ALL LETTERS SHALL BE CLEAR AND LEGIBLE
A MEASURING THE DIMENSIONS OF TAB TML AND SOLDER PEG.
6. FINISH TAB TML AND SOLDER PEG
   TIN PLATING : 2.0~4.0um MATTE OVER NICKEL PLATING 0.8~2.0um MATTE
7. PACKING : EMBOSS TAPE
8. FLAMMABILITY : UL94 - HB
B A VACUM GRIP AREA FREE OF BURR AND FECTOR PINS. MAX Ø8.0mm

		B	A	REV.
		KH171011 4-21	KH171011 4-10	PART NO.
		020_D_SMT_4M_H_ASSY_BK_G	020_D_SMT_4M_H_ASSY_NR_G	ASS'Y DESCRIPTION
		C	C	CODE

NO	DESCRIPTION	MATERIAL	FINISH/COLOR	Q'TY	
4	020 SMT SOLDER PEG-LEFT (HZT)	BRASS	POST-TIN	1	1
3	020 SMT SOLDER PEG-RIGHT (HZT)	BRASS	POST-TIN	1	1
2	020 SMT TAB TML (HZT)	BRASS	POST-TIN	4	4
1	020_D_SMT_4M_H_HSG_BK	PA9T GF30	BLACK	1	-
	020_D_SMT_4M_H_HSG_NR	PA9T GF30	NATURAL	-	1

CODE A (NATURAL)

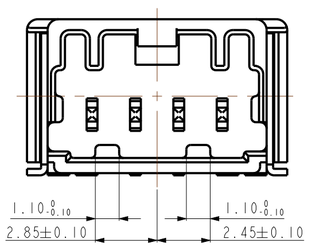

CODE B (BLACK)

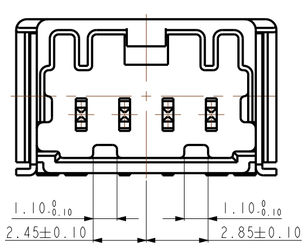

TOLERANCES UNLESS OTHERWISE SPECIFIED 0 ± 0.0 ± 0.00 ± 0.000 ± 0.0000 ± ANGLES ±	UNIT MM THIRD ANGLE PROJECTION	DRWN DR KOO CHKD KH PARK APVD CY CHOI MATERIAL SEE TABLE FINISH/COLOR SEE TABLE	(주)우주 일렉트로닉스 UJU Electronics co,.Ltd. NAME 020_D_SMT_4M_H_ASSY_G
PRODUCT SPEC -	APPLICATION SPEC -	WEIGHT -	CUSTOMER DRAWING: - / RESTRICTED TO: - / DRAWING NO: KH171011 4
			LOC - / SIZE A2 / SCALE 5:1 / SHEET 1 OF 1 / REV C

UAD-RD-0008 REV.0[2011]