REV	REVISION RECORD	DATE	DRWN	CHKD	APVD
A	REVISED(RD-2018-009)	11.MAY'17	KH	-	CY

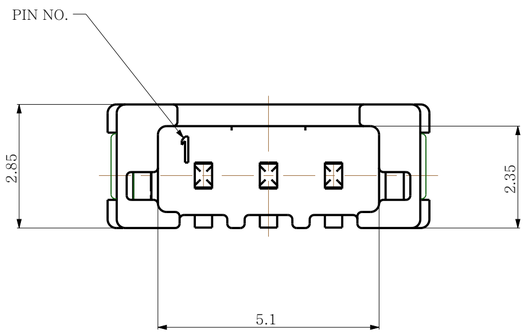

PCB PATTERN

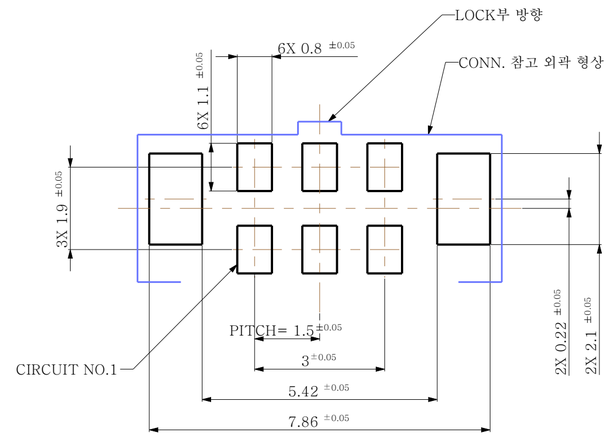

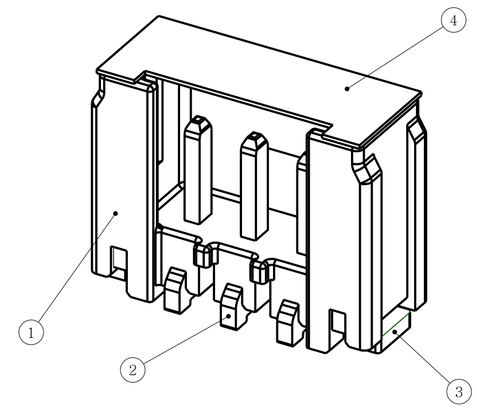

ISO VIEW

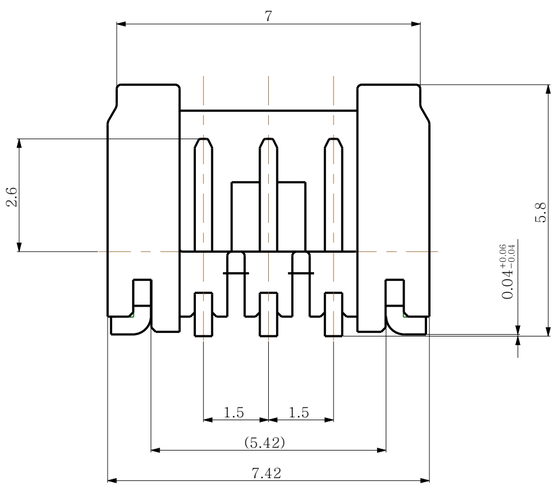

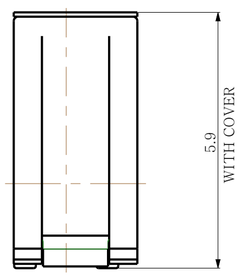

WITH COVER

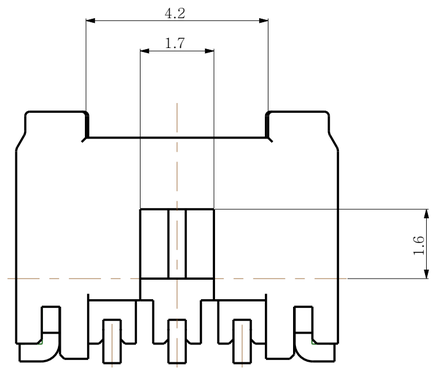

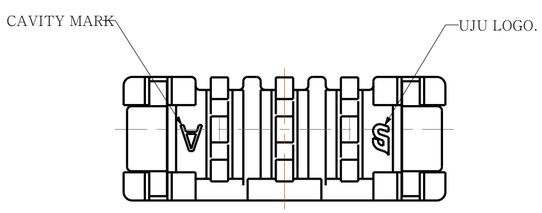

					BLACK	NATURAL	COLOR
	015 SMT 3M HDR ASSY(V)				BK	NR	ASSY PART NAME
	KH1600057-20	KH1600057-10	ASSY PART NO.				

NO.	DESCRIPTION	PART NO.	MATERIAL	FINISH/COLOR	Q'TY		
4	015 COVER TAPE	KN2000001	내열 TAPE		1	1	
3	015 SMT SOLDER PEG-L (VTC)	KM1600056-21	BRASS	POST-TIN	1	1	
	015 SMT SOLDER PEG-R (VTC)	KM1600056-20	BRASS	POST-TIN	1	1	
2	015 SMT TAB TML(V)	KM1600055-20	BRASS	POST-TIN	3	3	
1	015 SMT 3M HDR HSG(V)	KM1600058-20	PA9T-GF33	BLACK	1		
	015 SMT 3M HDR HSG(V)	KM1600058-10	PA9T-GF33	NATURAL		1	

NOTE

1. General Tolerance : see table toldrance
2. HSG DESCRIPTION : SEE TABLE
3. MATERIAL
   - HDR HSG : PA9T
   - SOLDER PEG : COPPER ALLOY (POST-TIN)
   - TAB TML : COPPER ALLOY (POST TIN)

TOLERANCE								
10MAX	30MAX	50MAX	70MAX	100MAX	120MAX	250MAX	250VR	ANGLE
±0.15	±0.20	±0.30	±0.40	±0.50	±0.75	±0.9	±1.4	±0.5도

TOLERANCES UNLESS OTHERWISE SPECIFIED
0 ±
0.0 ±
0.00 ±
0.000 ±
0.0000 ±
ANGLES ±

UNIT MM
THIRD ANGLE PROJECTION

DRWN KH.PARK
CHKD CY.CHOI
APVD SJ.SONG
MATERIAL SEE TABLE
FINISH/COLOR SEE TABLE

(주)우주 일렉트로닉스
UJU Electronics co.,Ltd.

NAME 015 SMT 3M HDR ASSY(V)

CUSTOMER DRAWING
DRAWING NO KH1600057

PRODUCT SPEC | APPLICATION SPEC | WEIGHT | LOC | RESTRICTED TO | SIZE A2 | SCALE 10:1 | SHEET 1 OF 1 | REV A

UAD-RD-0008 REV.0[201112]